**KLEIN**®

**Instrucciones / Instructions / Anweisungen / Instructions**

# EXTENDO® 4

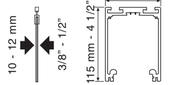


| Ref. | L | Lp | hv |
|---|---|---|---|
| 1641/1646 | 2.400-3.100 mm (7' 10 1/2" - 10' 2 1/16") | 5.000 mm (16' 4 7/8") | ≤ 2.500 mm (8' 2 7/16") |

L = _____ | D ≥ L/4 +125 mm (1 9/16") | Lp = Dx2+L | Lv = L/4 +75 mm (2 15/16")

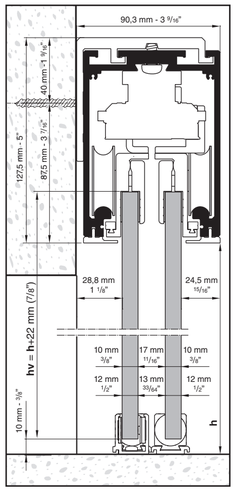


## Instal. lateral

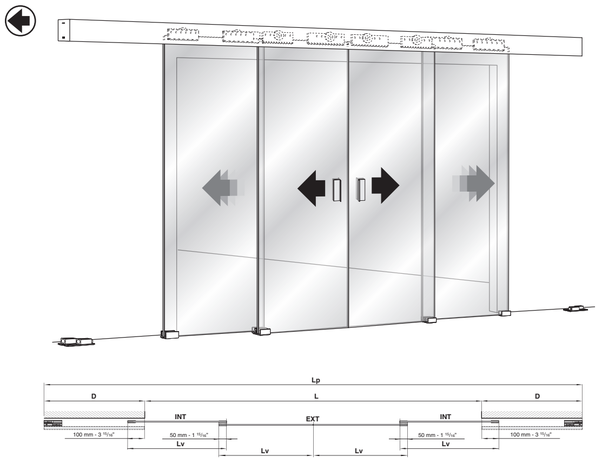


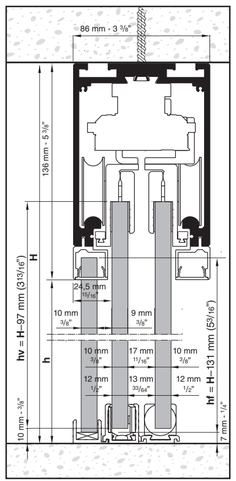


## Instal. superior

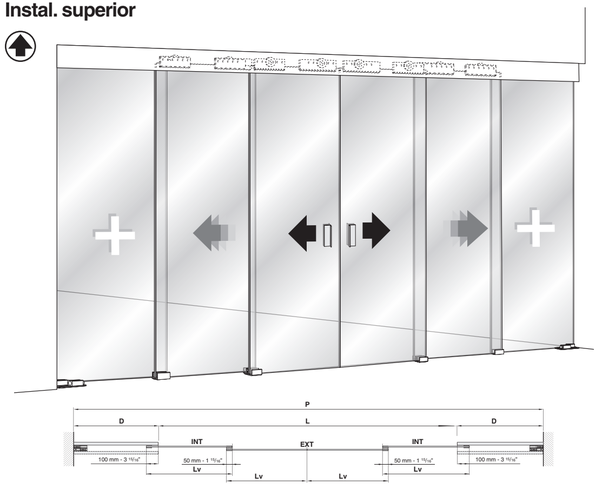


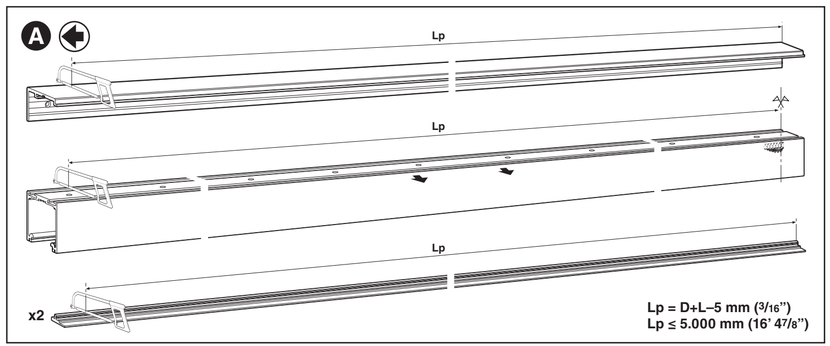


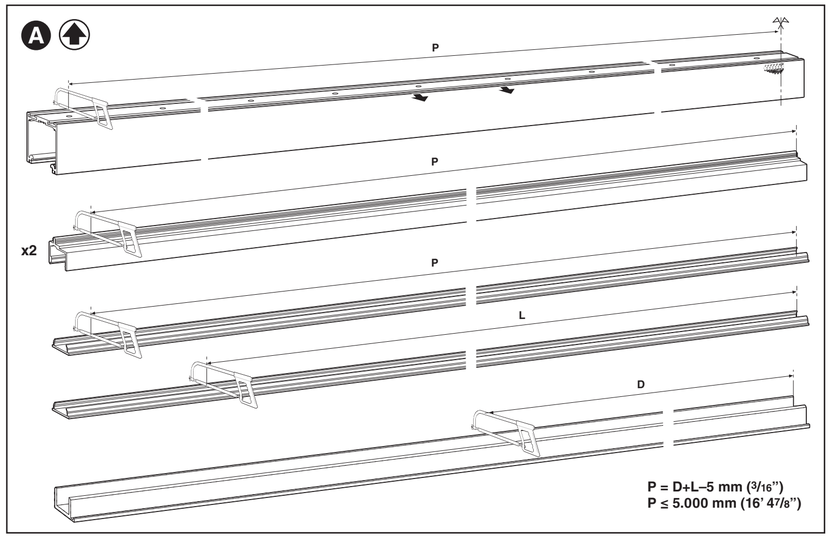


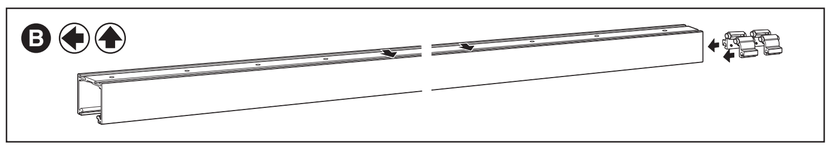


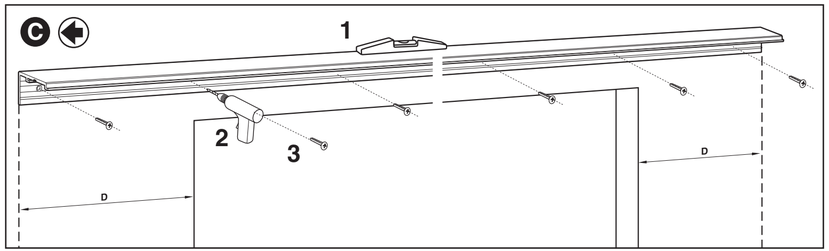


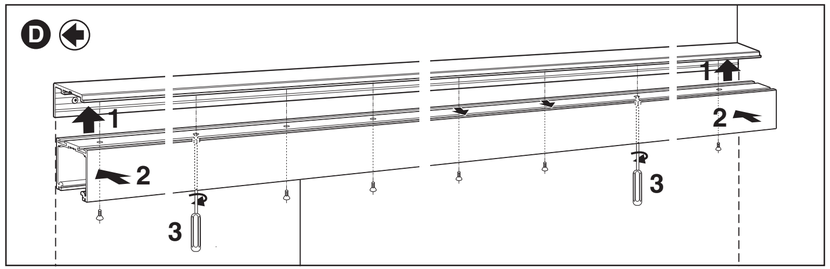


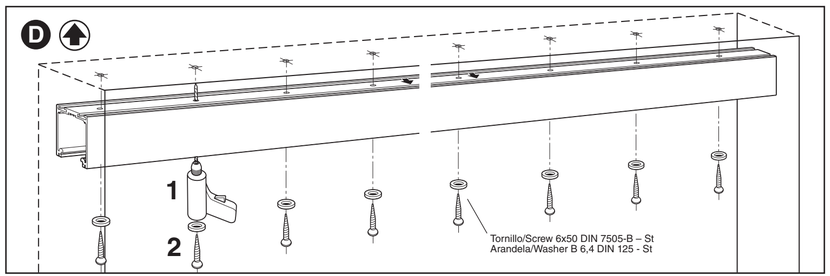


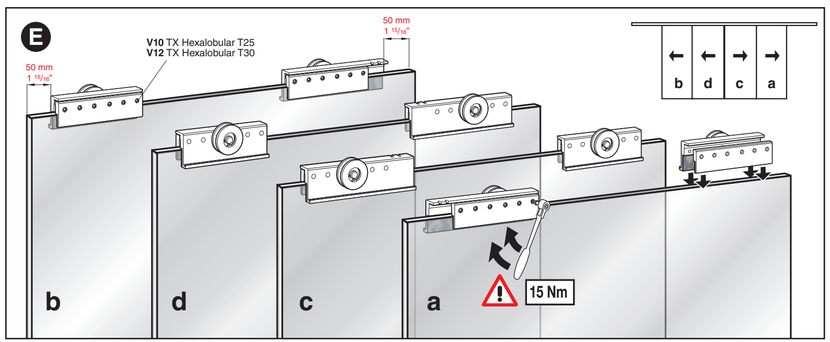



**KLEIN**®

**KLEIN EUROPE** - Edificio KLEIN - Polígono Industrial Can Cuyás, N-150 Km.1
08110 Montcada i Reixac (Barcelona-Spain)
Tel.: (+34) 935 751 010 - Fax: (+34) 935 760 109
+INFO: **www.klein-europe.com**



411-1641 11-11 PK-17

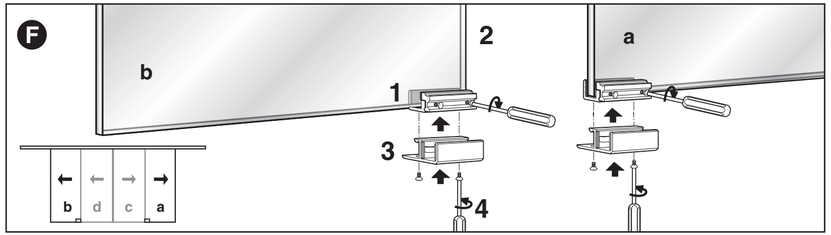
F
b
a
b d c a

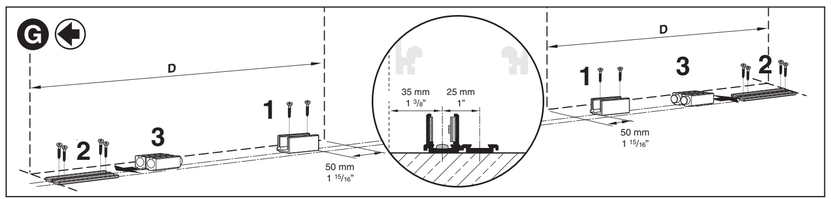
G
D
35 mm
1 3/8"
25 mm
1"
50 mm
1 15/16"

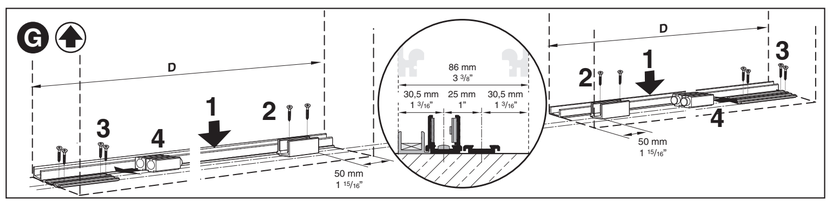
G
D
86 mm
3 3/8"
30,5 mm
1 3/16"
25 mm
1"
30,5 mm
1 3/16"
50 mm
1 15/16"

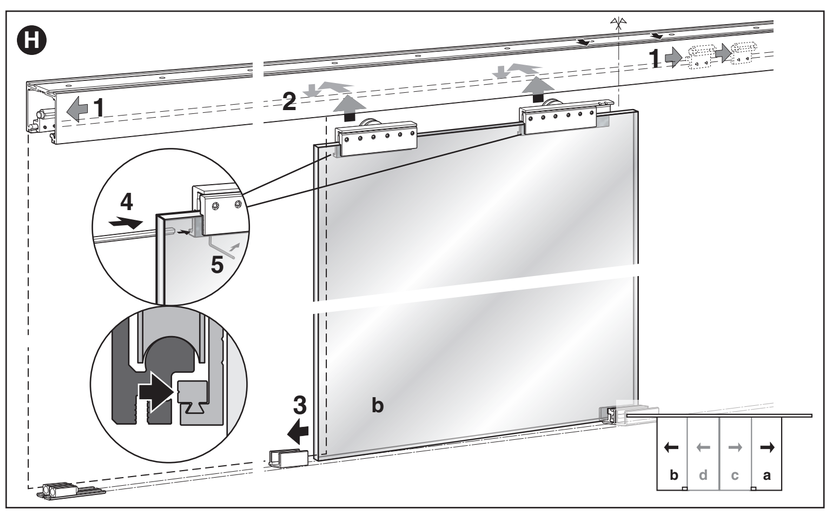
H
b
b d c a

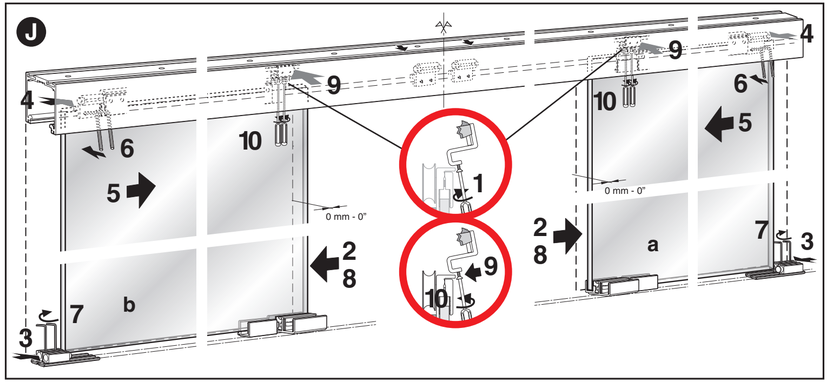
J
0 mm - 0"
0 mm - 0"
a
b

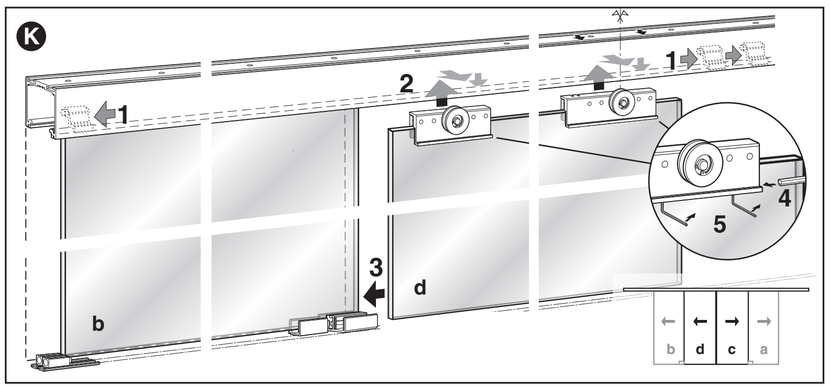
K
b
d
b d c a

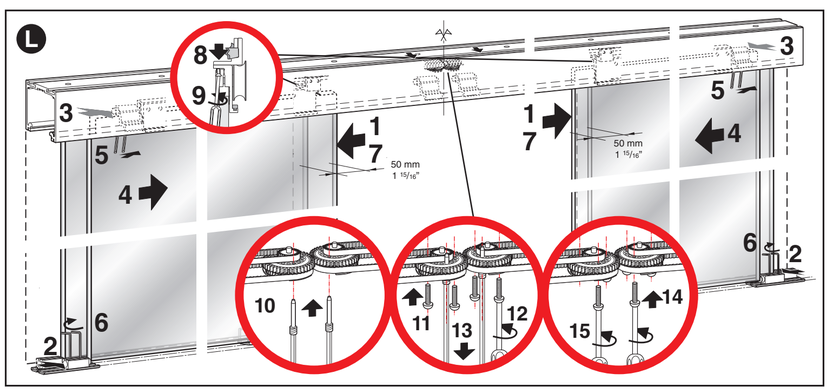
L
50 mm
1 15/16"
50 mm
1 15/16"

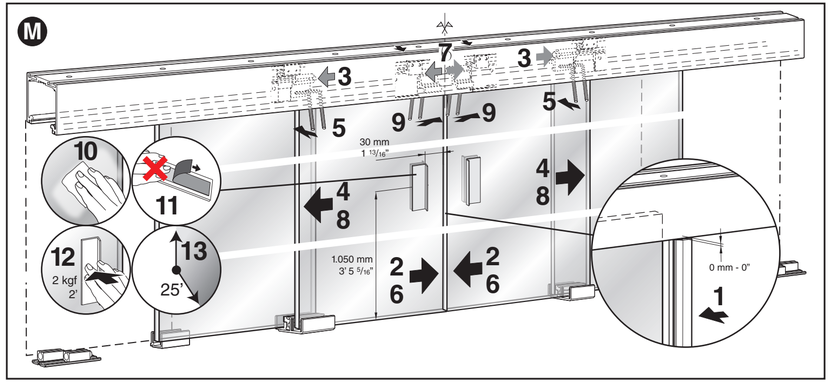
M
30 mm
1 13/16"
1.050 mm
3' 5 5/16"
2 kgf
2'
25'
0 mm - 0"

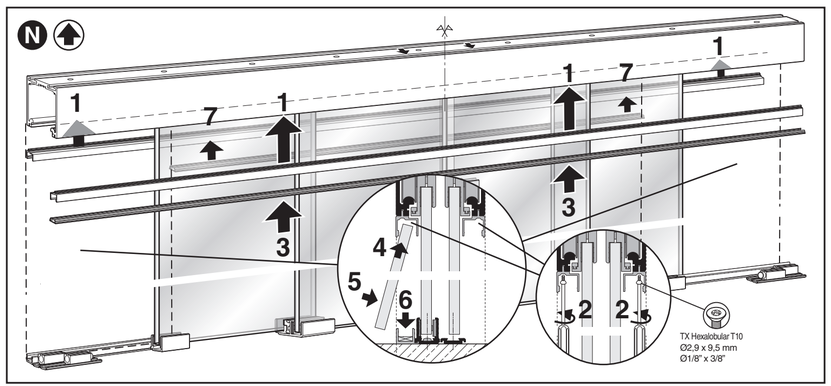
N
TX Hexalobular T10
Ø2,9 x 9,5 mm
Ø1/8" x 3/8"

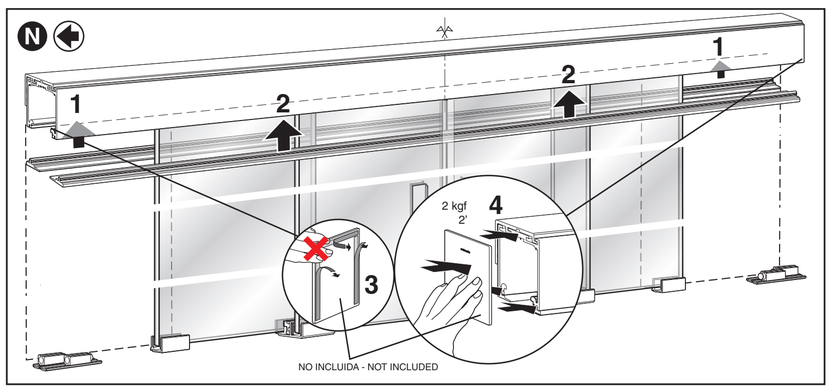
N
2 kgf
2'
NO INCLUIDA - NOT INCLUDED